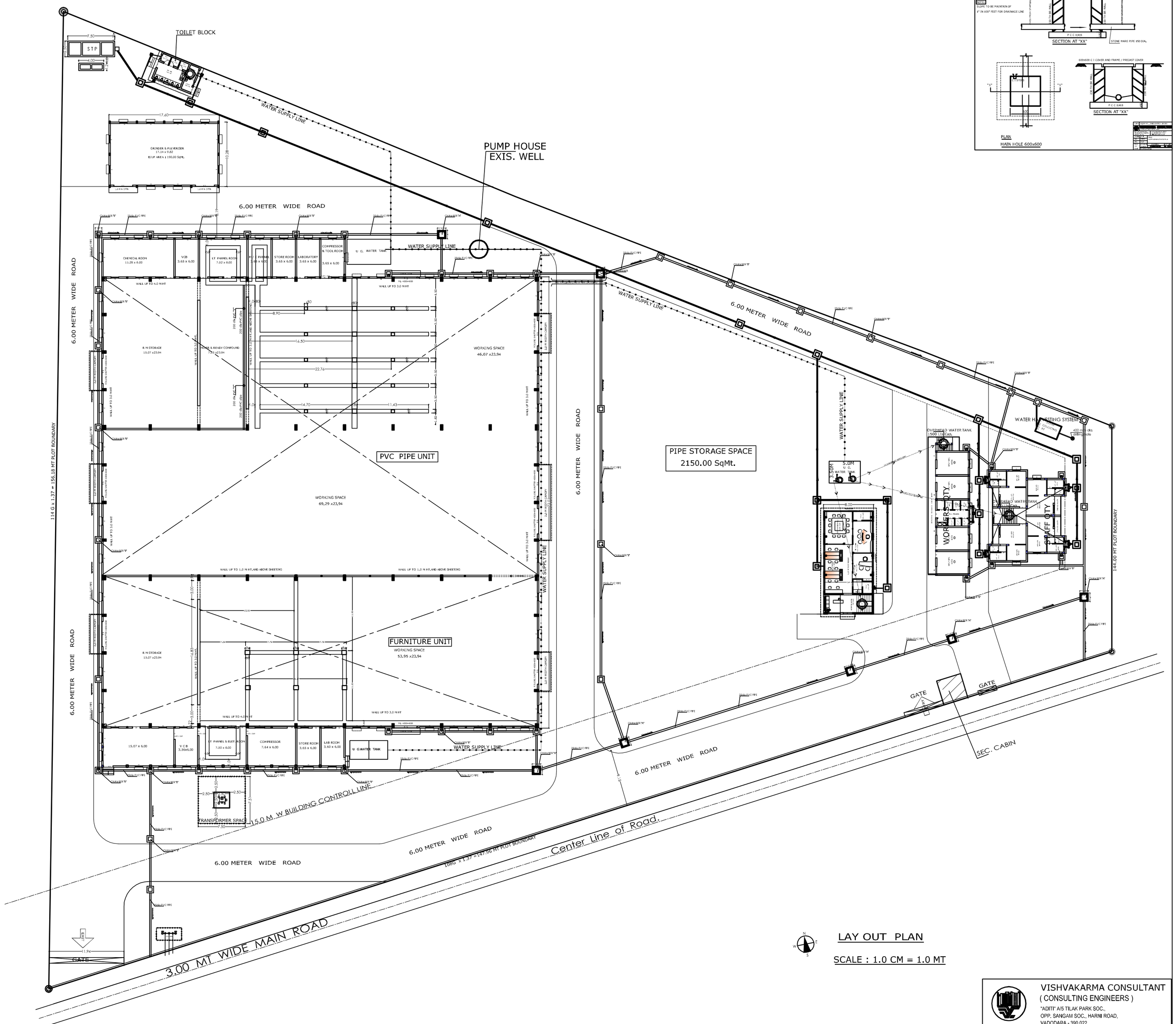

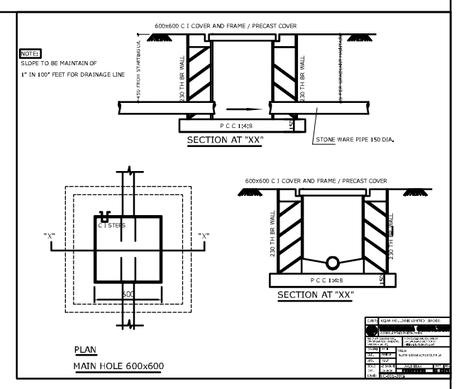

PROPOSED LAY OUT PLAN FOR "KISAN MOULDINGS LTD " ON SURVEY NO: 127/2 & 128/1,

AT VILL: BIR PLASSI., TALUKA : NALAGARH., DIST : SALON. (HIMACHAL)

VISHVAKARMA CONSULTANT
(CONSULTING ENGINEERS)
"ADITI" A/5 TILAK PARK SOC.,
OPP. SANGAM SOC., HARNI ROAD,
VADODARA - 390 022.
PHONE : (0265) 2461029 / 2481167
FAX : 91-265-2461029 / 2481167
E-Mail : vishconbrd@yahoo.com

DRAWN BY	CHECKED BY	DATE	DRG. NO : 07		
JATIN		20/01/10	SCALE	SHEET NO	REV. NO
			SCA	APD002	11

BADDI PLAN 10 10 09 BADDI LAY OUT FINAL 04 12 09