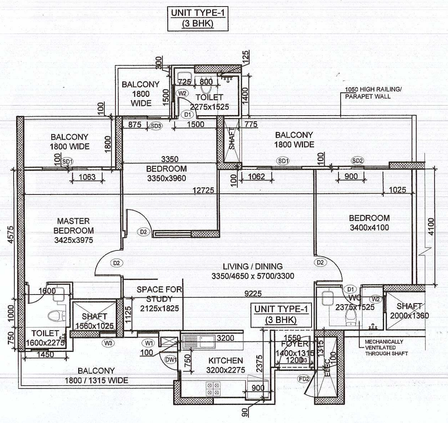

TYPICAL 3 BHK UNIT TYPE-1

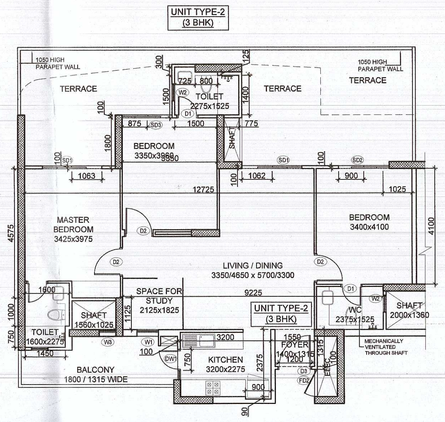

TYPICAL 3 BHK UNIT TYPE-2

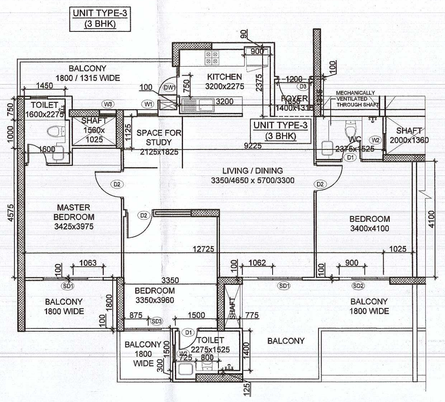

TYPICAL 3 BHK UNIT TYPE-3

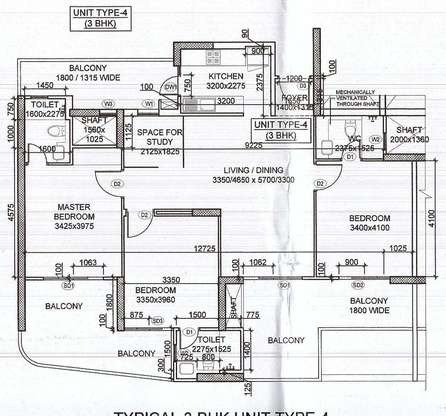

TYPICAL 3 BHK UNIT TYPE-4

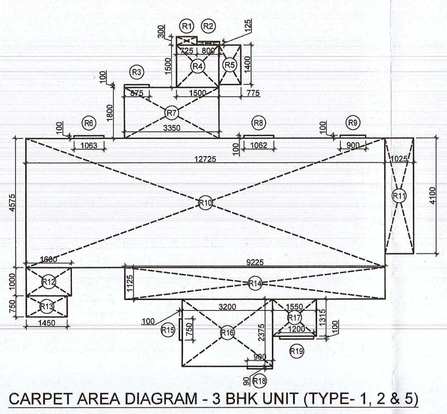

CARPET AREA DIAGRAM - 3 BHK UNIT (TYPE- 1, 2 & 5)

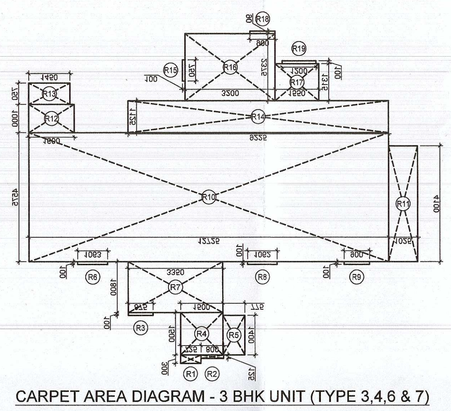

CARPET AREA DIAGRAM - 3 BHK UNIT (TYPE 3,4,6 & 7)

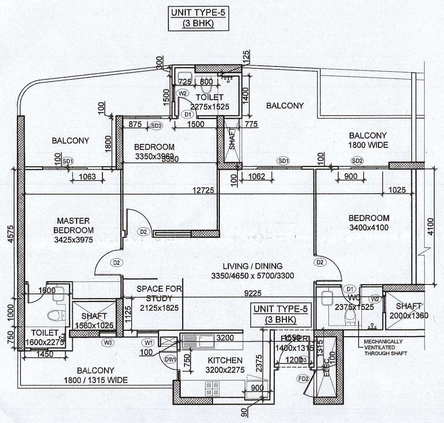

TYPICAL 3 BHK UNIT TYPE-5

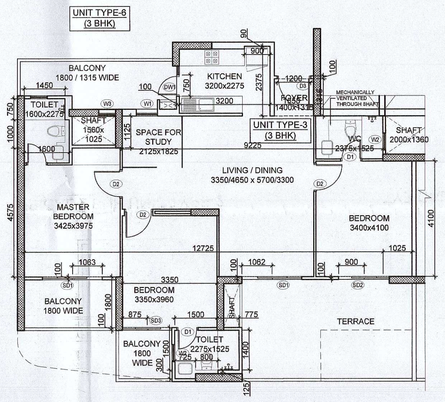

TYPICAL 3 BHK UNIT TYPE-6

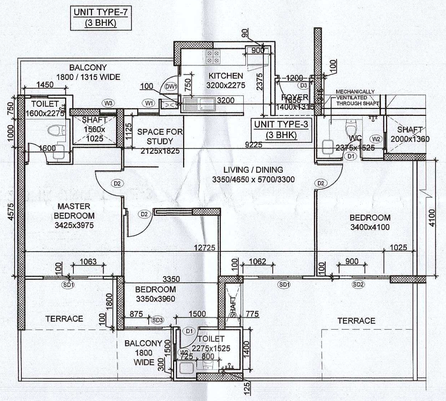

TYPICAL 3 BHK UNIT TYPE-7

CARPET AREA CALCULATION FOR 3BHK UNIT ALL TYPES							
CARPET AREA							
S.NO.	NOS.	FORMULA	LENGTH (A)	WIDTH (B)	WIDTH (C)	AREA	UNITS
R1	1	A X B	0.725	0.300		0.218	SQM.
R2	1	A X B	0.800	0.125		0.100	SQM.
R3	1	A X B	0.875	0.100		0.088	SQM.
R4	1	A X B	1.500	1.500		2.250	SQM.
R5	1	A X B	0.775	1.400		1.085	SQM.
R6	1	A X B	1.063	0.100		0.106	SQM.
R7	1	A X B	3.350	1.800		6.030	SQM.
R8	1	A X B	1.062	0.100		0.106	SQM.
R9	1	A X B	0.900	0.100		0.090	SQM.
R10	1	A X B	12.725	4.575		58.217	SQM.
R11	1	A X B	1.025	4.100		4.203	SQM.
R12	1	A X B	1.600	1.000		1.600	SQM.
R13	1	A X B	1.450	0.750		1.088	SQM.
R14	1	A X B	9.225	1.125		10.378	SQM.
R15	1	A X B	0.100	0.750		0.075	SQM.
R16	1	A X B	3.200	2.375		7.600	SQM.
R17	1	A X B	1.550	1.315		2.038	SQM.
R18	1	A X B	0.900	0.090		0.081	SQM.
R19	1	A X B	1.200	0.100		0.120	SQM.
				TOTAL (A) =		95.472	SQM.

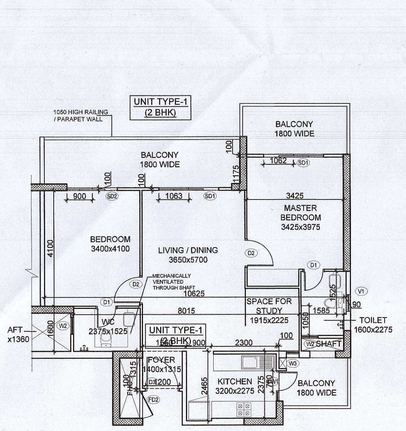

TYPICAL 2 BHK UNIT TYPE-1

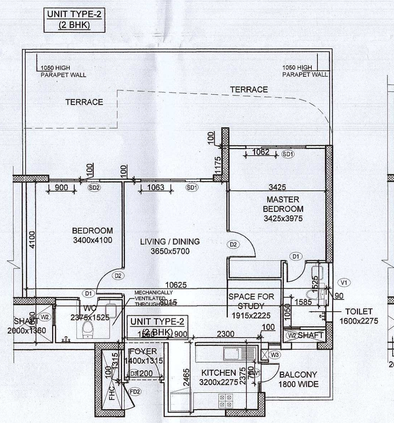

TYPICAL 2 BHK UNIT TYPE-2

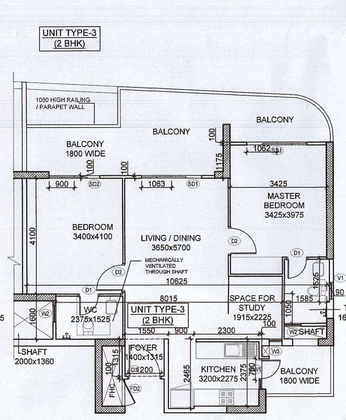

TYPICAL 2 BHK UNIT TYPE-3

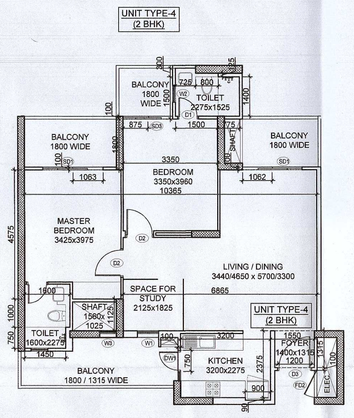

TYPICAL 2 BHK UNIT TYPE-4

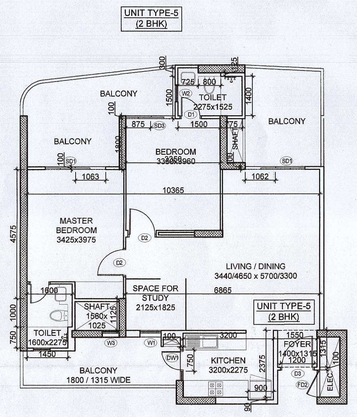

TYPICAL 2 BHK UNIT TYPE-5

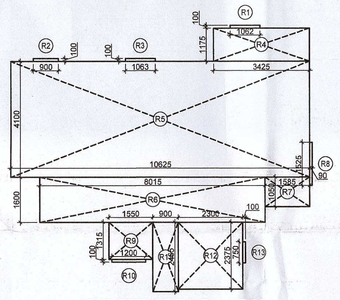

CARPET AREA DIAGRAM -
2 BHK UNIT TYPE - 01, 02 & 03

CARPET AREA CALCULATION FOR 2BHK UNIT TYPE - 01, 02 & 03							
CARPET AREA							
S.NO.	NOS.	FORMULA	LENGTH (A)	WIDTH (B)	WIDTH (C)	AREA	UNITS
R1	1	A X B	1.062	0.100		0.106	SQM.
R2	1	A X B	0.900	0.100		0.090	SQM.
R3	1	A X B	1.063	0.100		0.106	SQM.
R4	1	A X B	3.425	1.175		4.024	SQM.
R5	1	A X B	10.625	4.100		43.563	SQM.
R6	1	A X B	8.015	1.600		12.824	SQM.
R7	1	A X B	1.585	1.050		1.664	SQM.
R8	1	A X B	0.090	1.525		0.137	SQM.
R9	1	A X B	1.550	1.315		2.038	SQM.
R10	1	A X B	1.200	0.100		0.120	SQM.
R11	1	A X B	0.900	2.465		2.219	SQM.
R12	1	A X B	2.300	2.375		5.463	SQM.
R13	1	A X B	0.100	0.750		0.075	SQM.
				TOTAL (A) =		72.429	SQM.

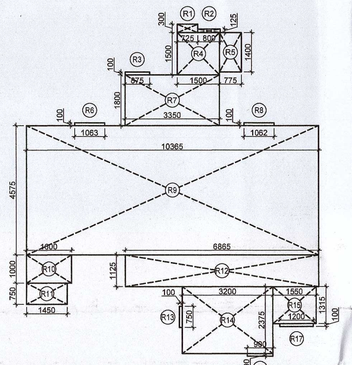

CARPET AREA DIAGRAM -
2 BHK UNIT TYPE - 4 & 5
(REFUGE FLOOR)

CARPET AREA CALCULATION FOR 2BHK UNIT TYPE - 04 & 05							
CARPET AREA							
S.NO.	NOS.	FORMULA	LENGTH (A)	WIDTH (B)	WIDTH (C)	AREA	UNITS
R1	1	A X B	0.725	0.300		0.218	SQM.
R2	1	A X B	0.800	0.125		0.100	SQM.
R3	1	A X B	0.875	0.100		0.088	SQM.
R4	1	A X B	1.500	1.500		2.250	SQM.
R5	1	A X B	0.775	1.400		1.085	SQM.
R6	1	A X B	1.063	0.100		0.106	SQM.
R7	1	A X B	3.350	1.800		6.030	SQM.
R8	1	A X B	1.062	0.100		0.106	SQM.
R9	1	A X B	10.365	4.575		47.420	SQM.
R10	1	A X B	1.600	1.000		1.600	SQM.
R11	1	A X B	1.450	0.750		1.088	SQM.
R12	1	A X B	6.865	1.125		7.723	SQM.
R13	1	A X B	0.100	0.750		0.075	SQM.
R14	1	A X B	3.200	2.375		7.600	SQM.
R15	1	A X B	1.550	1.315		2.038	SQM.
R16	1	A X B	0.900	0.090		0.081	SQM.
R17	1	A X B	1.200	0.100		0.120	SQM.
				TOTAL (A) =		77.727	SQM.

This drawing is a "COPYRIGHT" contents of this drawing or part thereof may not be used or reproduced without the permission of the Architect

NO. OF PRINTS	DATE	ISSUED TO	REMARKS

REVISION	DATE	DESCRIPTION	BY

GENERAL NOTES

1. All dimensions are in mm unless mentioned otherwise
2. No dimensions are to be scaled from this drawing.
3. All WC are mechanically ventilated through shaft.

A.T.P (HQ) Member B.P.A.C. | S.T.P (HQ) Member Secretary B.P.A.C. | S.T.P. (G) Member B.P.A.C. | C.T.P. (Hr.) Chairman B.P.A.C.

JD. | A.T.P.

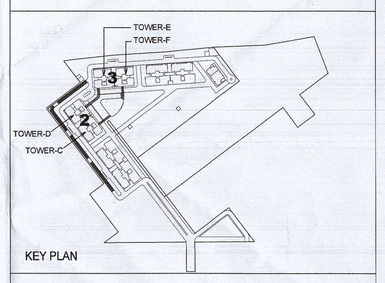

KEY PLAN

SUBMISSION DRAWINGS

CLIENT :
NOURISH DEVELOPERS PVT. LTD.

OWNER'S SIGN.

ARCHITECT'S SIGN.

PROJECT :
BUILDING PLAN FOR RESIDENTIAL COLONY UNDER NILP POLICY -2016 ON THE AREA MEASURING 10.30 ACRES (AFTER FREEZING OF AN AREA MEASURING 5.8125 ACRES (46K-10M) FALLING UNDER NCZ AND NON COMPACT POCKET DUE TO NCZ) (LICENCE NO. 106 OF 2022, DATED 5/8/2022 AT SECTOR-113 DISTRICT GURUGRAM, HARYANA BEING DEVELOPED BY NOURISH DEVELOPERS PVT. LTD

DRAWING TITLE

TOWER- C & D, E&F
TYPICAL 2/ 3 BHK UNITS TYPES PLANS & AREA DIAGRAM

DATE	CHECKED BY	APPROVED BY
SEP. 2022	DEEPAK AGARWAL	DEEPAK AGARWAL
SCALE	DEALT BY	
1:100	SHANKY GARG	

ARCHITECTS:-
C. P. KUKREJA ARCHITECTS
ASHIRWAD BUILDING,
D-1,GREEN PARK,
NEW DELHI - 110016
PHONE :- 011 26863953 FAX :- 011 26865770
EMAIL-cpka@cpkukreja.com

DRAWING NO.
21020/SWD-113/SUB./LATEST/BLOCK-02&03/A-2/3 BHK-01

CAD NO.

DRG. NO.
16