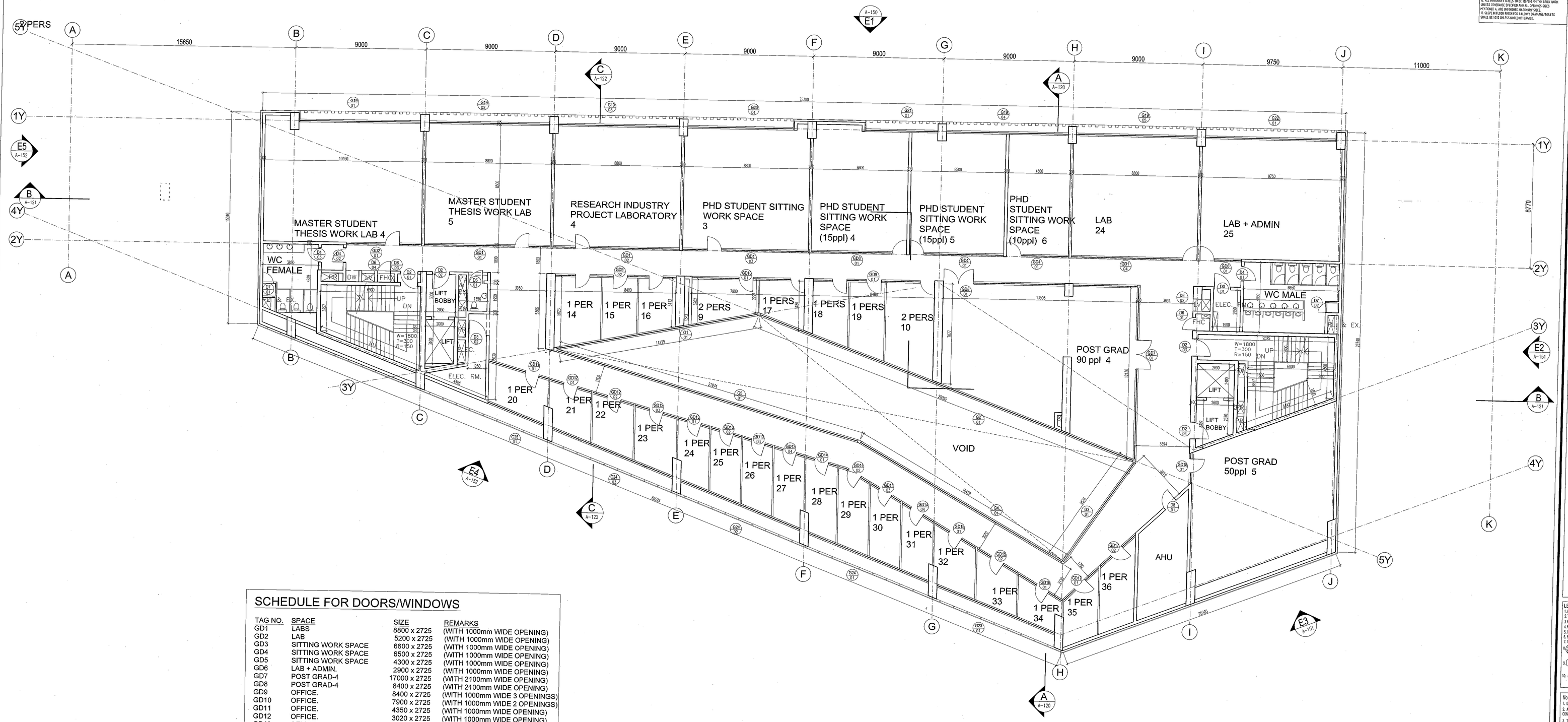

SCHEDULE FOR DOORS/WINDOWS

TAG NO.	SPACE	SIZE	REMARKS
GD1	LABS	8800 x 2725	(WITH 1000mm WIDE OPENING)
GD2	LAB	5200 x 2725	(WITH 1000mm WIDE OPENING)
GD3	SITTING WORK SPACE	6600 x 2725	(WITH 1000mm WIDE OPENING)
GD4	SITTING WORK SPACE	6500 x 2725	(WITH 1000mm WIDE OPENING)
GD5	SITTING WORK SPACE	4300 x 2725	(WITH 1000mm WIDE OPENING)
GD6	LAB + ADMIN.	2900 x 2725	(WITH 1000mm WIDE OPENING)
GD7	POST GRAD-4	17000 x 2725	(WITH 2100mm WIDE OPENING)
GD8	POST GRAD-4	8400 x 2725	(WITH 2100mm WIDE OPENING)
GD9	OFFICE.	8400 x 2725	(WITH 1000mm WIDE 3 OPENINGS)
GD10	OFFICE.	7900 x 2725	(WITH 1000mm WIDE 2 OPENINGS)
GD11	OFFICE.	4350 x 2725	(WITH 1000mm WIDE OPENING)
GD12	OFFICE.	3020 x 2725	(WITH 1000mm WIDE OPENING)
GD13	OFFICE.	2240 x 2725	(WITH 1000mm WIDE OPENING)
GD14	OFFICE.	2430 x 2725	(WITH 1000mm WIDE OPENING)
GD15	OFFICE.	3300 x 2725	(WITH 1000mm WIDE OPENING)
GD16	OFFICE.	3600 x 2725	(WITH 1000mm WIDE OPENING)
GD17	OFFICE.	3350 x 2725	(WITH 1000mm WIDE OPENING)
GD18	OFFICE.	2200 x 2725	(WITH 1000mm WIDE OPENING)
GD19	LABS	8400 x 2950	
GD20	LABS	7450 x 2950	
GD21	LABS	5050 x 2950	
GD22	LABS	9150 x 2950	
GD23		8860 x 2950	
GD24		9025 x 2950	
GD25		4250 x 2950	
G1	VOID AREA	14480 x 3800	
G2	VOID AREA	28300 x 3800	
G3	VOID AREA	8800 x 3800	
G4	VOID AREA	16600 x 3650	
G5	VOID AREA	8970 x 3650	
G6	STAFF ROOM	22200 x 3800	
D2	STAIRCASES+LIFT LOBBIES	1200 x 2725	
D3	ELECTRICAL ROOM	1200 x 2725	
D4	TOILETS	1050 x 2725	
D5	DISABLE TOILET	1100 x 2725	
D6	FHC's & LV's	900 x 2725	
D7	JANITOR CLOSET	750 x 2100	
D8	AHU	1000 x 2725	

NOTES:
1. ALL DIMENSIONS ARE IN MM (UNO).
2. ALL DIMENSIONS ARE TO BE READ ONLY AND NOT TO BE MEASURED/ SCALED.
3. THIS DRAWING SHOULD BE READ IN CONJUNCTION WITH ALL RELEVANT STRUCTURAL, ARCHITECTURAL, SERVICES AND LANDSCAPE DRAWINGS.
4. ANY DISCREPANCIES IN THE DRAWINGS OR AT SITE SHOULD BE BROUGHT TO THE NOTICE OF THE ARCHITECTS IMMEDIATELY.
5. FURNITURE/ FIXTURES SHOWN ARE INDICATIVE ONLY. PLEASE REFER RESPECTIVE DETAIL DRAWINGS & SCHEDULES.
6. ARCHITECTURAL DRAWINGS TO BE FOLLOWED FOR THE LOCATION OF ALL STRUCTURAL MEMBERS & MASONRY WALL FOR SIZES AND REINFORCEMENT DETAILS OF STRUCTURAL MEMBERS RELEVANT STRUCTURAL DWGS. TO BE REVIEWED.
7. DO NOT SCALE. REFER RELEVANT LARGE SCALE DETAIL DRAWINGS AS INDICATED.
8. REINFORCEMENT TO BE PROVIDED FOR SLABS IN ALL SHAFTS AND CUTOUTS EXCEPT LIFT SHAFTS FOR SLAB TO BE CAST TO SEAL THE SHAFT AFTER INSTALLATION OF ALL SERVICES.
9. MASONRY WORK AROUND SERVICES SHAFTS AND CUTOUTS TO BE KEPT ON HOLD/ COORDINATED WITH SERVICES CONTRACTORS FOR INSTALLATION OF ALL SERVICES.
10. FLOOR FINISH DROP FOR TOILETS SHALL BE 18MM, AND AT BALCONY IT SHALL BE 20MM UNLESS OTHERWISE SPECIFIED.
11. SLAB DROP: IN KITCHEN = 200MM, IN BATH=300MM, IN BALCONIES= 100MM UNLESS BALCONY=300MM, AT ACT LEVEL = 150MM UNLESS OTHERWISE SPECIFIED.
12. ALL PARAPHARY WALLS TO BE 100/230 MM THK BRICK WORK UNLESS OTHERWISE SPECIFIED AND ALL OPENINGS SIZES MENTIONED A. ARE UNFINISHED MASONARY SIZES.
13. SLOPE IN FLOOR FINISH FOR BALCONY DRAINAGE/TOILETS SHALL BE 1/200 UNLESS NOTED OTHERWISE.

THIS DRAWING IS THE PROPERTY OF DESIGNPLUS ASSOCIATES SERVICES (PVT.)LTD. (DPS) (DSAS) AND NOT TO BE COPIED OR USED WITHOUT THEIR WRITTEN PERMISSION.

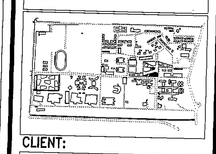

CLIENT:
THAPAR UNIVERSITY
Thapar Technology Campus
Patiala 147004
Punjab, India

CONSULTANTS:

DESIGN ARCHITECT:
McCULLOUGHMULVIN ARCHITECTS
14, Molesworth Street
Dublin 2, Ireland
Email : thapar@mcculloughmulvin.com

EXECUTIVE ARCHITECT:
DESIGNPLUS ASSOCIATES SERVICES PVT. LTD.
E-145, Okhla Industrial Estate
Phase III New Delhi – 110020
Email : projects@dpa.co.in

STRUCTURAL CONSULTANTS:
PRISTINE IDEAS CONSULTING ENGINEERS
G-520, Lower Ground Floor
Chittranjan Park
New Delhi- 110019
Email : djay@pristineideas.org

MEP CONSULTANT:
KANWAR KRISHAN ASSOCIATES PVT. LTD.
F-301, Lado Sarai
New Delhi-110030
Email : novindia@vsnl.com

LANDSCAPE CONSULTANT:
INTEGRAL DESIGNS
E-90 Anand Niketan
New Delhi- 110021
Email : Smith@integraldesigns.in

LEGEND:
1. FFL — FINISHED FLOOR LEVEL (IN METER)
2. SOS — TOP OF SLAB/STRUCTURE (IN METER)
3. BOB — BOTTOM OF BEAM
4. BOS — BOTTOM OF SLAB
5. CWO — CLEAR MASONRY OPENING
6. BOFC — BOTTOM OF FALSE CEILING
7. TBC — TO BE CONFIRMED
8. ARCHITECTURAL GRID/ARCHITECTURAL GRID NO.
9. D – W — D: DOOR, W: WINDOW; W3: ROLLING SHUTTER, TYPE NUMBER
10. ELEVATION AND SECTION NO. — REFERENCE DRAWING NO.

Notes:
1. DO NOT SCALE THE DRAWING.
2. ALL DIMENSIONS TO BE CHECKED ON SITE BEFORE ANY CONSTRUCTION OR MANUFACTURE.
3. THIS DWG TO BE READ IN CONJUNCTION WITH ALL RELEVANT ARCHITECTURAL, STRUCTURAL AND MEP SERVICES DWGS.
4. ANY DISCREPANCIES BETWEEN DRAWINGS TO BE IMMEDIATELY BROUGHT TO CONSULTANTS ATTENTION.

REVNO	DESCRIPTION	DATE	BY
DRAWING LOG			

SUBMISSION DRAWING

Project
THAPAR UNIVERSITY
EXTENSION
PATIALA

Drawing Title
COMPUTER SCIENCE
LEVEL-03 PLAN

Job Number	Scale
---	1:100
CAD file ref.	Date Nov. 2015
Drawn by / Checked by / Approved by	PA
Drawing Number THP/CS/A-104	Rev. 00

A

ਨਕਸ਼ਾ ਨਿਰਮਾਣ, ਪਟਿਆਲਾ
ਕਬਜ਼ਾ ਕੇ ਅਥੇ ਬਿਲ ਨੰ. 2392 ਮਿਤੀ 27/11/15
ਕੰਟੋਲ ਨੰ. 5/2/12

ਕਾਰਜਕਾਰੀ ਨਗਰ ਨਿਗਮ ਦੇ ਪ੍ਰਬੰਧਕ
ਮਿਤੀ 24.11.16 ਤਾਈਦੀ
ਨਕਸ਼ਾ ਪ੍ਰਵਾਨ ਹੈ
ਟੀਐਸਆਈ ਟਾਊਨ ਪਲਾਨਰ
ਨਗਰ ਨਿਗਮ, ਪਟਿਆਲਾ

PASHANT K. ARORA
Architect
(Reg. No. CA/1993/20161)
New Delhi

ਨਕਸ਼ਾ ਇਸ ਸਰਤ ਤੇ ਪ੍ਰਮਾਣ ਕੀਤਾ ਜਾਂਦਾ ਹੈ ਕਿ ਉਸਾਰੀ ਦਾ ਕੰਮ ਕੇਵਲ ਲੋਕ ਸਿਹਤ ਮਹਿਕਮੇ ਦੇ ਨਾਲ ਰਜਿਸਟਰਡ ਲੇਖਕ ਤੋਂ ਹੀ ਕਰਵਾਇਆ ਜਾਵੇ।

ਨਕਸ਼ਾ ਇਸ ਸਰਤ ਤੇ ਪ੍ਰਮਾਣ ਕੀਤਾ ਜਾਂਦਾ ਹੈ ਕਿ ਉਸਾਰੀ ਕਰਨ ਸਮੇਂ ਅੰਡਰ ਗਰਾਊਂਡ ਵਰਤੇ ਨਹੀਂ ਕੀਤੀ ਜਾਏਗੀ।